PASTE & THICKENED TAILINGS FLOW CONTROL

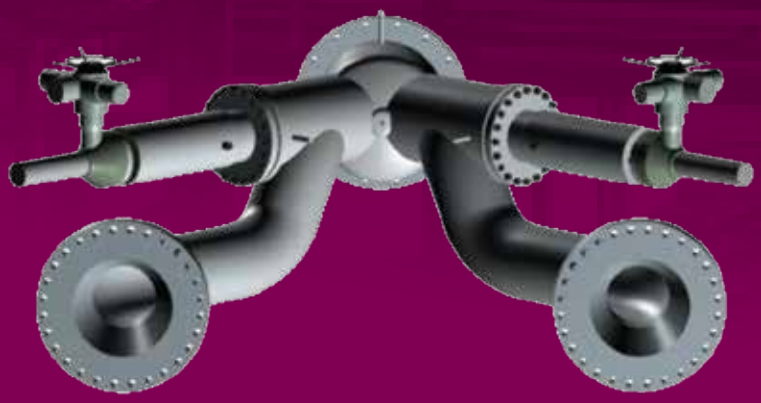

MULTIPORT DIVERSION SOLUTIONS

PROEGER
flow solutions

PROESWITCH

PASTE PUMP SWITCHING

Every point of the delivery process, covered.

ABOUT PROEGER FLOW SOLUTIONS

Since 2011 we have focused on solutions for specialised areas of the mining/minerals and upstream oil and gas sectors.

Over the journey we became more focused in mining activities where our main expertise lies providing genuine solutions with proven results.

In 2017 we remodelled the business focusing on opportunities globally and became an Australian exporter whereby we design and manufacturer our own range of severe service flow control products using the knowledge we have gained targeting known application challenges identified within the Paste/Backfill and Tailings sectors offering our customers solutions for every point of the flow loop.

Helping our customers overcome historical valve wear and functional issues has positioned Proeger Flow Solutions as an industry leader in valve solutions for Paste/ Backfill and Tailings Flow Control.

PROESWITCH

PASTE PUMP SWITCHING

WHY PROESWITCH?

When you have a pump on demand and pump on standby and you can ill afford the lengthy downtime to switch pipework between pumps in the midst of a delivery campaign, turn to our **PROE**SWITCH Pump Switching Multiport Valves to help save valuable time.

PROEGER
flow solutions

GRAVITY FEED SYSTEM

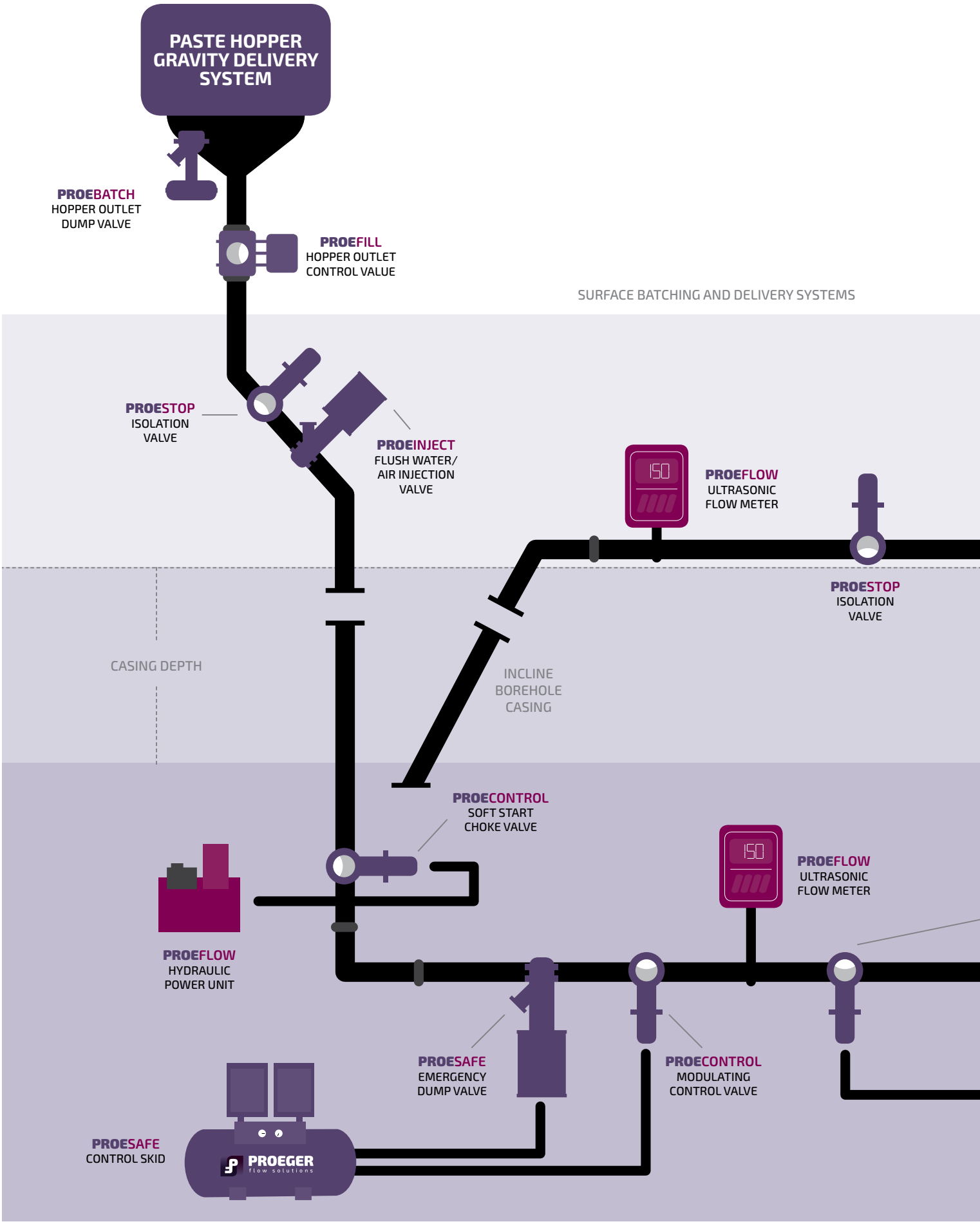

HIGH PRESSURE PUMPED SYSTEM

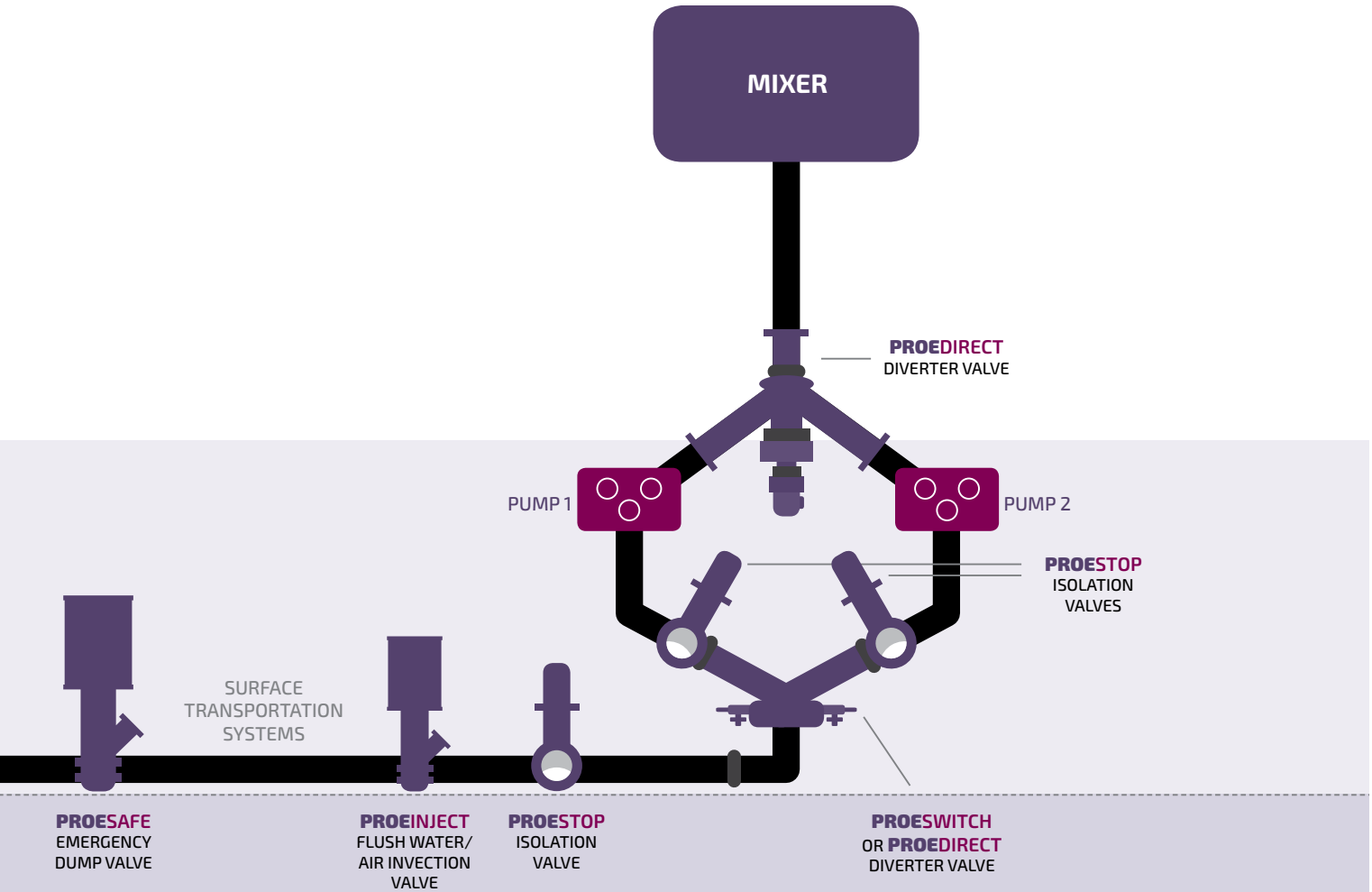

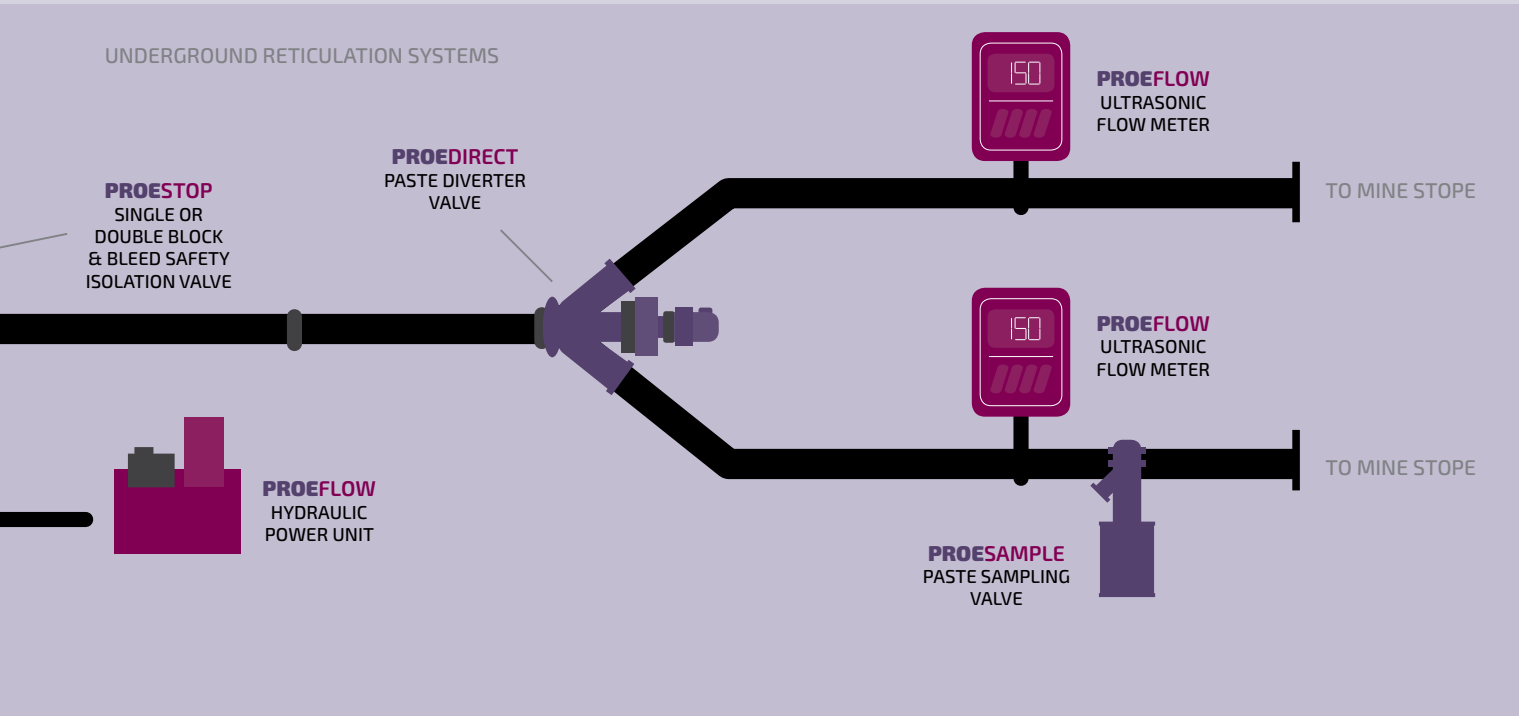

APPLICATION

Primary purpose is for switching of flows between paste or tailings pumps mounted in parallel where one pump is in constant demand and the second pump is there as back up when the primary pump fails or is shut down for scheduled maintenance. The benefits of this allow immediate switching of flows from one delivery pump to the other without expensive time-consuming flushing and pipework changes to redirect flow. These valves are well suited to all pressure applications up to 250 Bar

Depending on the direction the valve is installed, it can easily convert between a Diverter Valve to a Switching Valve simply by installing in reverse.

KEY FEATURES

- 60.0°degree Y pattern and large swept elbow designs minimise change of direction and potential wear problems
- Smooth passages for unrestricted flow and low frictional losses
- Internal hard face weld overlay to piston and valve bore for greater wear resistance
- Electrically actuated configurations preferred for safe operation in remote control situations
- Optional pneumatic actuated variations available upon request.
- Double Quad Rings seat seals preventing any paste from entering the cavity dead areas
- Highly durable PTFE cavity filler seals and wipers are utilised.
- Suitable for both inlet and discharge side of pumps.
- Valve can be completely disassembled for maintenance and cleaning activities if required.

MULTIPORT PUMP SWITCHING VALVE

The Switching Valve orientation is particularly helpful where there are two bore lines in parallel that deliver paste independently but not simultaneously and the need to switch between one delivery line or the other is required.

- Paste Delivery Systems
- Tailings Transfer to Storage
- Tailings Dewatering / Thickening

LEFT PORT OPEN | BOTH PORTS CLOSED | RIGHT PORT OPEN

SPECIFICATIONS

ITEM / DESCRIPTION	DESCRIPTION
Body Design	Customised To End User Needs
Construction Type	Fabricated (Welded) Body
Design Codes	ASME B16.34, ISO EN12516, AD 2000 & CODAP
Testing Specification	API 598 & ISO EN12266
Certificate of Compliance	PED 97/23/EC
Operator Type	Electric or Pneumatic - Double Acting
Stem	High Strength - Anti-Blowout Design
Piston	Stellite Hard Faced

SIZE & PRESSURE RANGE	DESCRIPTION
Size Range	80NB, 100NB, 125NB, 150NB & 200NB / other sizes available upon request.
Working Pressure (max)	20, 50, 100 & 150 Bar / ≥ 250 Bar designs available upon request.
Connection Types	RF, RTJ, Victaulic ES & Victaulic 809

OVERVIEW

Our pump switching valves are fully customised to each application relative to piping run orientation and materials of construction to better assist system designers and end users with integration into new or existing infrastructure.

Flush water injection valves are another feature that can be added to assist with post-delivery flushing of residual solids.

Valve bodies can be manufactured cost effectively from carbon steel or stainless where required. One thing that remains a constant is the stainless steel internal trim and Stellite overlayed wear surfaces.

Feel free to contact us for more detailed information specific to your application.

FLUSHING

Available as required are strategically placed flush ports positioned as close as can be to the piston seating area to be able to direct short blasts of high pressure water through a purposely designed flush water piston injection valve designed not to block. These piston injection valves can be fitted as an option or the flush ports simply left capped with blanking flanges, so the flush injection valves can be fitted later.

Depending on the plants operating procedures for flushing before are after each diversion action, the purpose of the flush water injection valves is to provide an additional concentrated water jet to valve internals to dissolve and flush away any residual paste left in the valve ports. Further details on how this works and operator options are available upon request.

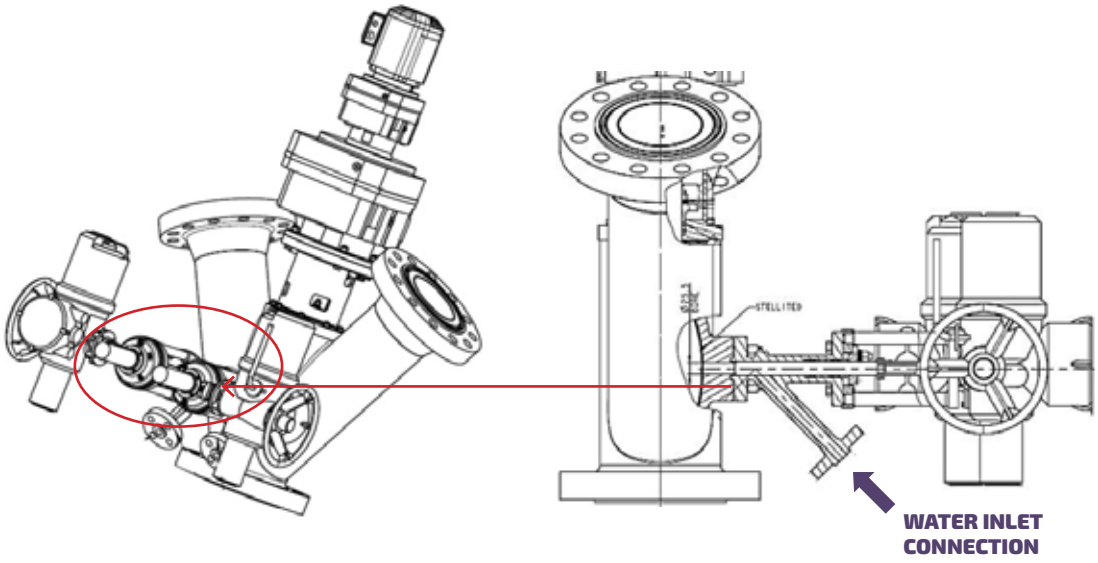

BILL OF MATERIALS – KEY COMPONENTS

ITEM NO.	DESCRIPTION	MATERIAL
1	Body	A216-WCB or A351-CF8M (+ Stellite 6 HF Weld Overlay)
2	Bonnet	304SS or 316SS
3	Plug	304SS (+ Stellite 6 HF Weld Overlay Internally)
4	Stem	17-4PHSS / 1.4542
5	Seals	PTFE
6	Quad Seals	NBR Rubber
7	Bolting & Nuts	B7M/2HM or B8M/8M
8	Friction Washers	PTFE

MODEL SELECTION

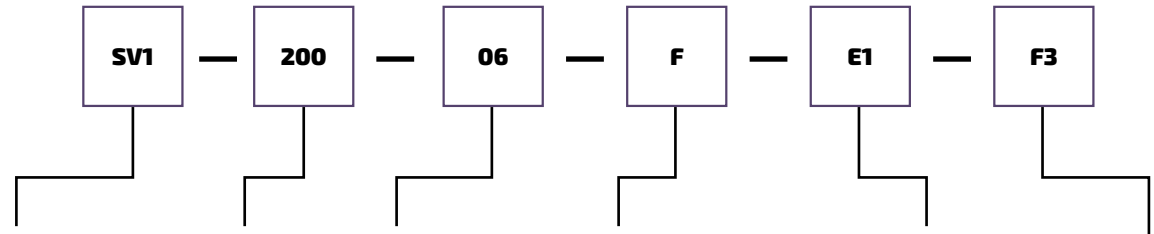

MODEL

SV1 = 1 x Inlet / 2 x Outlets
SV2 = 2 x Inlets / 1 x Outlet
SV3 = 1 x Inlet / 3 x Outlets
SV4 = 1 x Inlet / 4 x Outlets

SIZE

80
100
125
150
200
250

CLASS

01 = 150#
03 = 300#
06 = 600#
09 = 900#
15 = 1500#

CONNECTION

F = RF
J = RTJ
H = HUB ENDS
V = VICTAULIC

OPERATOR

E1 = 110v/115v 50/60 Hz
E2 = 220v/240v 50 Hz
E3 = 380v/400v 50 Hz
E4 = 415v 50 Hz
E5 = 680v 50 Hz
E6 = 1000v 50 Hz
E7 = 400v-415v 60 Hz
E8 = 600v-680v 60 Hz
E9 = 525v 50 Hz
(WEG (Zest) W22)
GO = Gear Operator

FLUSH WATER VALVES

EMPTY = Blanking Flanges
HW = Manual Handwheel
F2 = Pneumatic Double Acting
F3 = Pneumatic Single Acting
E1 = Electric 110v/115v 50 Hz
E2 = Electric 220v/240v 50 Hz
E3 = Electric 380v/400v 50 Hz
E4 = Electric 415v 50 Hz
E5 = Electric 680v 50 Hz
E6 = Electric 1000v 50 Hz
E7 = Electric 110v/115v 60 Hz
E8 = Electric 400v-415v 60 Hz
E9 = Electric 600v-680v 60 Hz
E10 = Electric 1000v 60 Hz

PLEASE NOTE THE FLUSH WATER VALVES COME STANDARD IN DN25, BUT LARGER SIZES IN DN40 AND DN50 ARE ALSO AVAILABLE UPON REQUEST TO DELIVER LARGER VOLUMES OF FLUSH WATER AS REQUIRED. THERE IS ALSO A CHOICE OF OPERATOR TYPES ACCORDING TO AVAILABLE SERVICES ON SITE.

OUR OTHER PRODUCTS

PROEFILL

PASTE HOPPER OUTLET CONTROL VALVE

PROESAFE

BOREHOLE EMERGENCY DUMP VALVE

PROEDIRECT

MULTIPORT DIVERTER / SWITCHING VALVE

PROECONTROL

BOREHOLE CHOKE & RETIC CONTROL VALVE

PROESTOP

HIGH PRESSURE PASTE & SLURRY ISOLATION VALVE

PROEINJECT

AIR / WATER INJECTION / FLUSH VALVE

PROESAMPLE

PASTE BATCHING SAMPLING VALVE

PROEBATCH

TANK BOTTOM OUTLET VALVE

PROESWITCH

TAILINGS SWITCHING / DIVERTER VALVE

PROEGER
flow solutions

Sales Office
9 Quandong Street, Meridan Plains Queensland 4551
T: +61 7 5438 8255 | **M:** +61 (0)418 606 255 | **E:** info@proegerflowsolutions.com

www.proegerflowsolutions.com